BZT52C15S

Surface Mount Zener Diode

Zener Voltage - 15V

Description

- Surface Device Type Mounting
- Low Zener Impedance
- Power Dissipation of 200mW
- High Stability and High Reliability

Mechanical Data

- Case: SOD323 Package
- Case Material: "Green" Molding Compound UL Flammability Classification Rating 94V-0
- Terminals:Matte tin plated,solderable per MIL-STD-750 ,method 2026
- Component in accordance to RoHS
- Halogen Free

Note: Products with logo HY or HY are made by HY Electronic (Cayman) Limited.

Ordering Information

- Package :SOD323
- Reel Size :7 (inches)
- Quantity Per Reel :3,000/Tape & Reel
- Quantity One Box :45,000/Tape & Reel

Package Outline

SOD323 Top View

Device Schematic & PIN Configuration

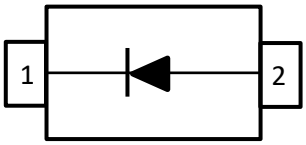

Product Type Marking Code

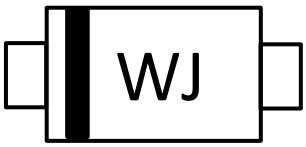

Maximum Ratings (@TA = +25°C, unless otherwise specified.)

Absolute Ratings

Parameter	Symbol	Value	Unit
Forward Voltage @ IF = 10mA	V_F	0.9 (1)	V
Power Dissipation	P_D	200 (2)	mW
Storage Temperature Range	T_{STG}	-65 to +150	◦ C

Electrical Characteristics

Parameter	Test Conditions	Symbol	Min	Typ	Max	Unit
Zener Voltage Range	Vz@Izt	Vz	13.8	15	15.6	V
Zener Impedance	Zzt@Izt	Zzt	–	–	30	Ω
Zener Impedance	Zzk@Izk	Zzk	–	–	200	Ω
Reverse Leakage Current	IR@VR	IR	–	–	0.1	uA
Typical Temperature Coefficent	Tc@Iztc	Iztc	9.2	–	13	mV/ ◦ C

Note:1. Short duration test pulse used to minimize self-heating effect

2. Device mounted on ceramic PCB: 7.6mm x 9.4mm x 0.87mm with pad areas 25mm^2

Rating and Characteristic Curves

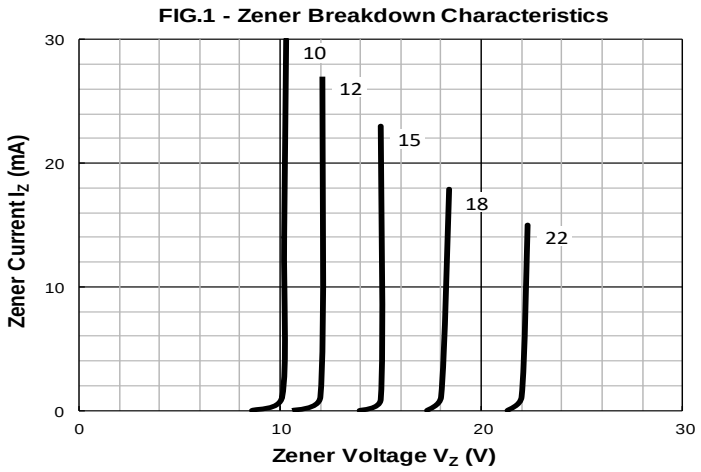

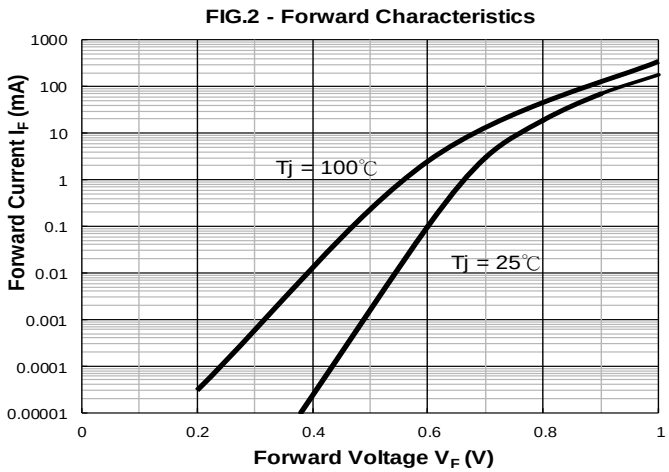

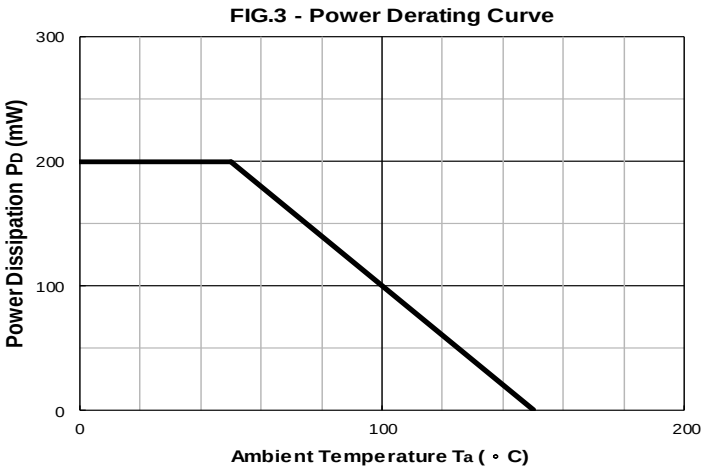

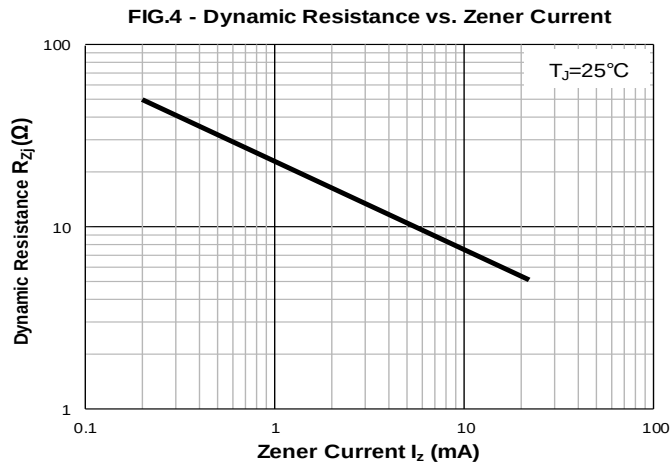

The curve above is for reference only.

Package Outline Dimensions

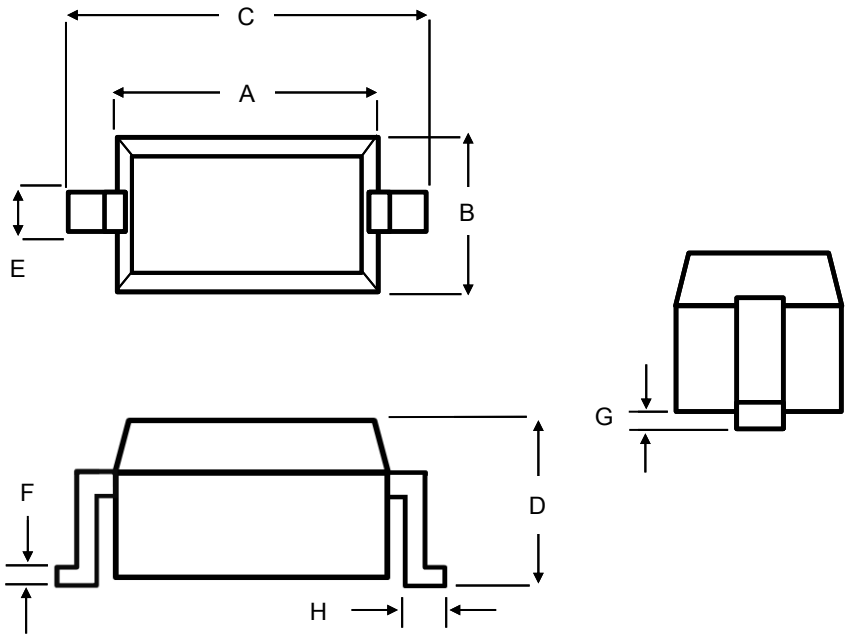

SOD323 Package		
Dim	Min	Max
A	1.60	1.80
B	1.20	1.40
C	2.50	2.70
D	-	1.00
E	0.25	0.35
F	0.08	0.15
G	-	0.10
H	0.25	0.40
All Dimensions in mm		

Suggested Soldering Pad Layout

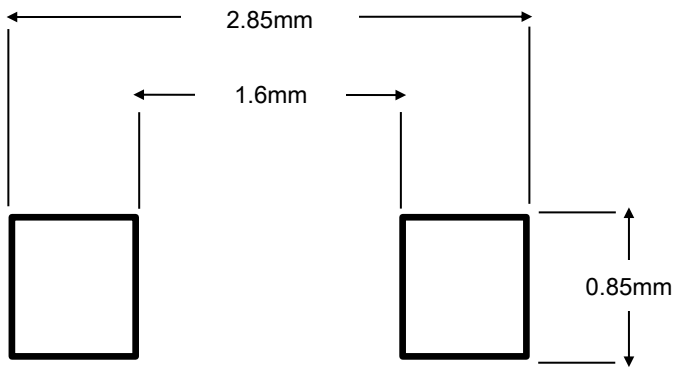

Note:

1.The pad layout is for reference purposes only.

2.General tolerance ±0.05mm

Legal Disclaimer Notice

Disclaimer

All specifications and data are subject to be changed without notice to improve reliability function or design or other reasons.

HY makes no warranty, representation or guarantee regarding the suitability of the products for any particular purpose or the continuing production of any product. To the maximum extent permitted by applicable law, HY disclaims (i) any and all liability arising out of the application or use of any product, (ii) any and all liability, including without limitation special,consequential or incidental damages, and (iii) any and all implied warranties, including warranties of fitness for particular purpose, non-infringement and merchantability.

Statements regarding the suitability of products for certain types of applications are based on HY's knowledge of typical requirements that are often placed on HY products in generic applications. Such statements are not binding statements about the suitability of products for a particular application. It is the customer's responsibility to validate that a particular product with the properties described in the product specification is suitable for use in a particular application.Parameters provided in datasheets and specifications may vary in different applications and performance may vary over time. All operating parameters, including typical parameters, must be validated for each customer application by the customer's technical experts. Product specifications do not expand or otherwise modify HY's terms and conditions of purchase, including but not limited to the warranty expressed therein.

Except as expressly indicated in writing, HY products are not designed for use in medical, life-saving, or life-sustaining applications or for any other applications in which the failure of the HY product could result in personal injury or death. Customers using or selling HY products not expressly indicated for use in such applications do so at their own risk.Please contact authorized HY personnel to obtain written terms and conditions regarding products designed for such applications.

No license, express or implied, by estoppel or otherwise, to any intellectual property rights is granted by this document or by any conduct of HY. Product names and markings noted herein may be trademarks of their respective owners.