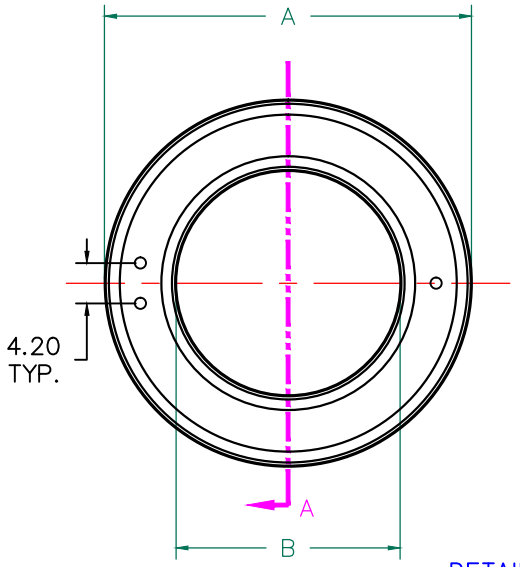

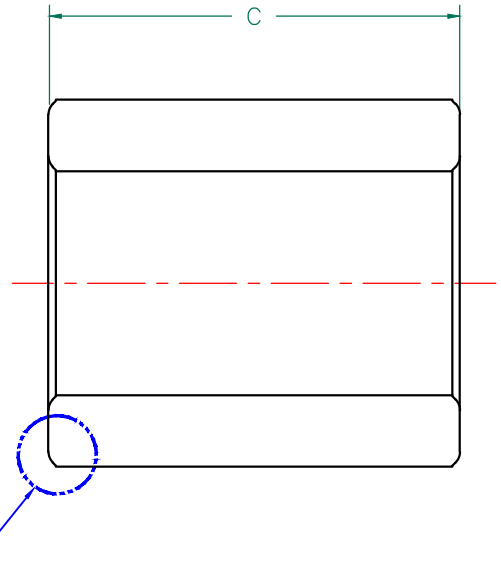

IMPEDANCE (Z)			
Frequency	25 MHz	100 MHz	300 MHz
Nominal (REF)	96 Ω	191 Ω	308 Ω
Minimum	- Ω	153 Ω	- Ω

Z vs. FREQUENCY
(REF. ONLY)

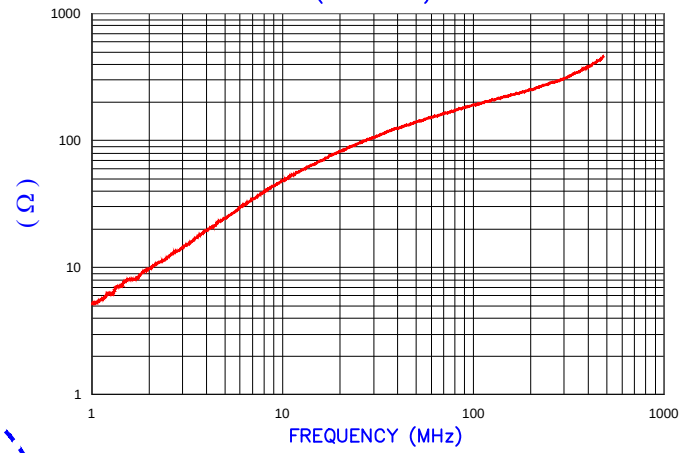

AGILENT E4991A Impedance/Material Analyzer
HP 16092A-Test Fixture

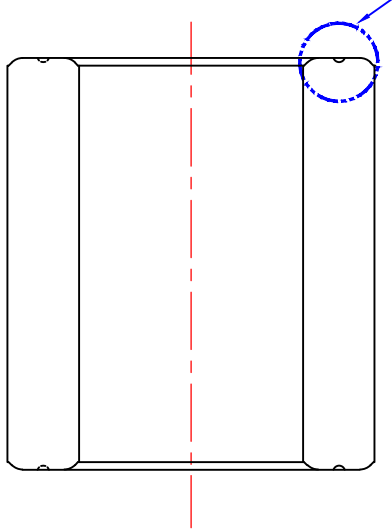

SECTION A–A

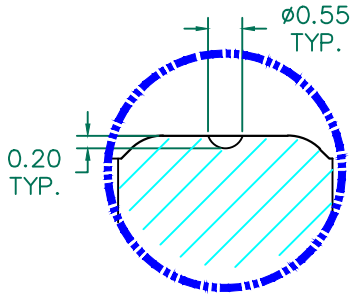

DETAIL "B"
SCALE=6:1

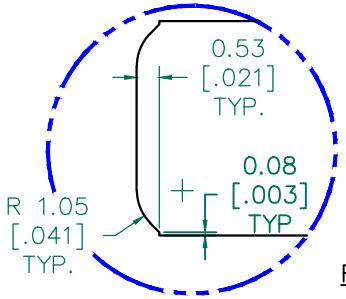

DETAIL "A"
CHAMFER
SCALE=6:1

FERRITE CORE DIMENSIONS (SPEC): mm [in]

A	25.40 [1.000]	±	0.46 [.018]
B	15.49 [.610]	±	0.30 [.012]
C	28.50 [1.122]	±	0.71 [.028]

NOTES: UNLESS OTHERWISE SPECIFIED

1. COSMETIC SPECIFICATION REFER TO WI–QA–038.

WEIGHT/1000 44.57 kgs [98.26 Lbs]

SCALE DRAWING 1:1

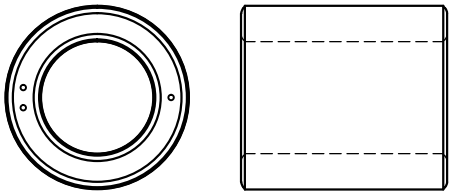

28B0999–300

REV	DESCRIPTION	DATE	INT
B	ADD DOT AND NOTES, UPDATED LOGO	03/19/2019	Jcai
A	ORIGINAL DRAFT	08/18/09	Jcai

DIMENSIONS ARE IN mm [INCHES].

This print is the property of Laird Tech. and is loaned in confidence subject to return upon request and with the understanding that no copies shall be made without the written consent of Laird Tech. All rights to design or invention are reserved.

PROJECT/PART NUMBER:	REV	PART TYPE:	DRAWN BY:
28B0999–300	B	FERRITE CORE	Jcai

DATE:	SCALE:	MATERIAL:
08/18/09	2:1	FERRITE
CAD # 28B0999–300–B	TOOL # B0999D	