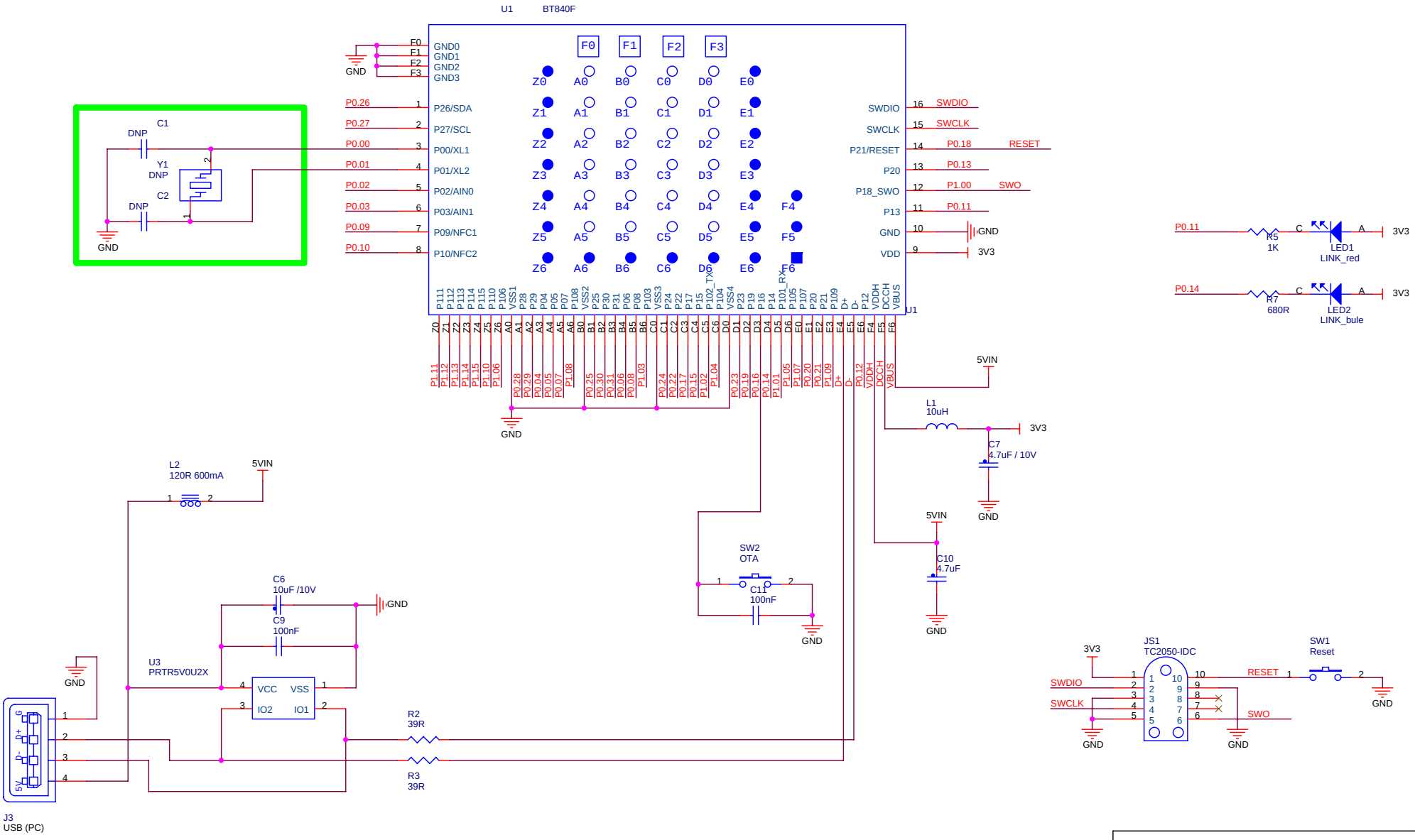

FANSTEL Corporation.

Title	**DONGLE**	
Size B	Document Number BT840F	Rev 1.2
Date: Tuesday, November 06, 2018	Sheet 1 of 1	