PRODUCT NAME : 2920镜头

1. SPECIFICATION :

1.SENSOR SIZE	1/3 1/4″
2.FOCAL LENGTH (EFL)	f= 2.9 mm
3.F/NO (INFINITE)	F/NO= 2.0
4.BACK FOCAL LENGTH	BFL= 5.45 mm
5.FLANGE BACK LENGTH	FB= 5.35 mm
6.FIELD OF VIEW (DIAGONAL)	= D121.7° (1/3), D85.1° (1/4)
7.TTL	= 20.29
8.Thread Size	= M12*P0.5
9.STRUCTURE	= 4C/4E+IR
10.Operating Temperature Range	= -30° C~+75%,under RH 90% -40° C~+85%,under RH 99%

2. OPTICAL LAYOUT :

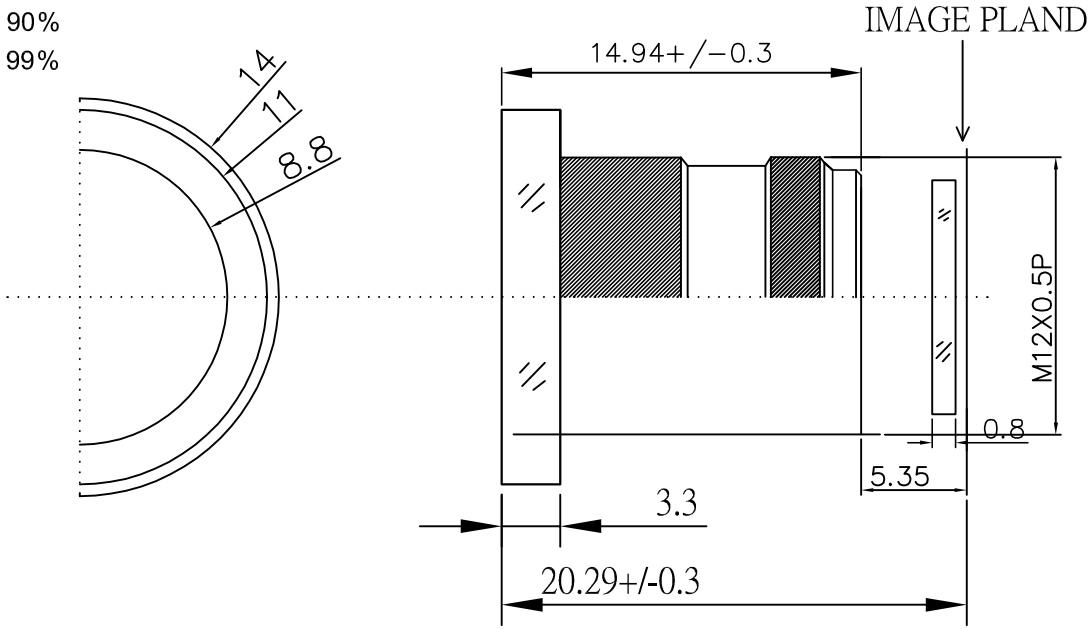

REV	DESCRIPTION	DATE	NAME
①			
②			
③			
④			

NAME	2920镜头		SCALE		DRAWN
VIEW		REV OO	DATE	2011-10-26	CHECKED
			BORDER	A4	APPROVED