CLIFF

ISS.	AMEND	DATE
1	1st DRAWN	08/02/10
2	WIRING ADDED	03/06/10
3	IMAGES + BATCH LABEL	29/11/16

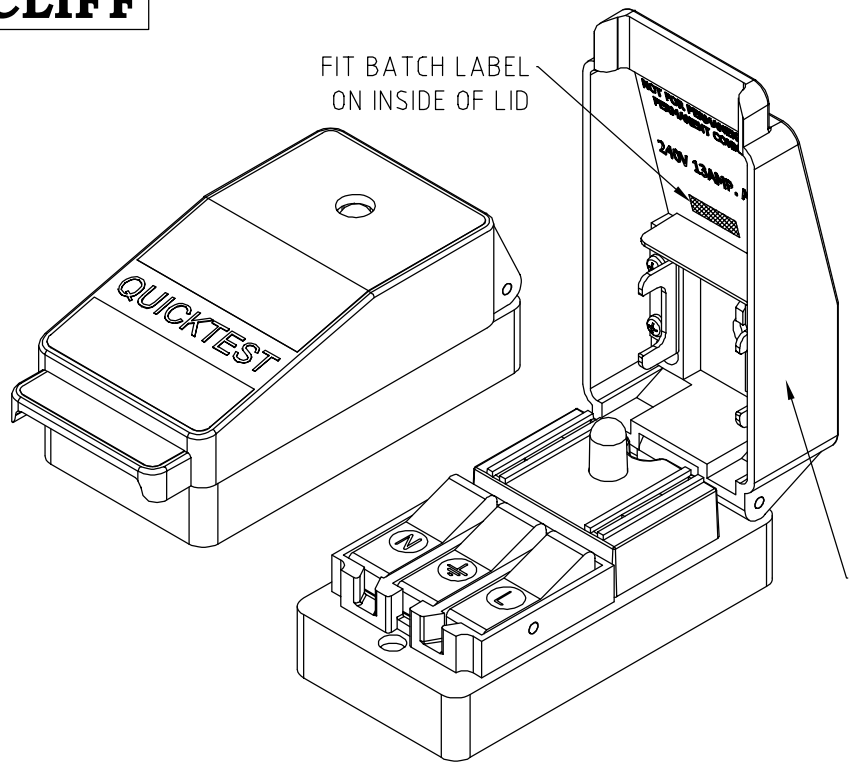

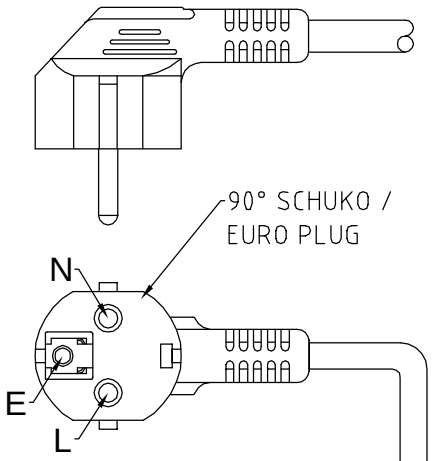

BAC2544 - BLACK
H05VV-F 3x0.75mm²
Length=2m COIL

WIRING

N ——— N
E ——— E
L ——— L

N ⏚ L
CHECK COLOUR AND ID

PACK QT1
INSTRUCTION LEAFLET

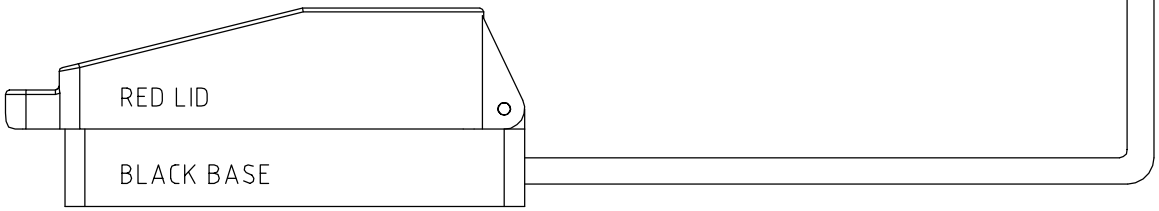

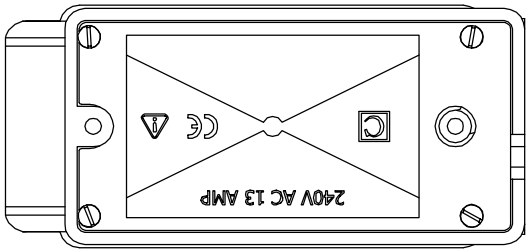

PACKING:
a) FIT BATCH LABEL ON INSIDE OF LID.
b) FIT WITH 5A FUSE
c) COIL CABLE AND PACK IN POLY BAG WITH QT1 INSTRUCTION LEAFLET.

POLYBAG

QT1 1st DRAWN 28/10/91

RoHS ✓COMPLIANT

TOLERANCE
NO DEC. PLACE ±
1 DEC. PLACE ±
2 DEC. PLACE ±
HOLE Ø ±
ANGLES ±
UNLESS
OTHERWISE STATED

Cliff Electronic Components Ltd.
76 Holmethorpe Avenue, Holmethorpe Industrial Estate,
Redhill, Surrey, RH1 2PF, England, UK
Tel: 01737-771375 Fax: 01737-766012 Website: www.cliffuk.co.uk

THE CONTENTS OF THIS DOCUMENT MUST NOT BE COPIED OR DISCLOSED TO A 3rd PARTY WITHOUT WRITTEN PERMISSION OF CLIFF UK. © 2010

DIMENSIONS IN MILLIMETERS UNLESS OTHERWISE STATED. WORK TO DIMENSIONS. REMOVE ALL BURRS. IF IN DOUBT ASK.

3rd ANGLE PROJECTION:

DO NOT SCALE

MATERIAL: COMPOSITE

FINISH: AS MOULDED (N=BLUE E=GREEN L=BROWN)

DRAWN: T.J.O.

APPROVED: D.P.J.

TITLE: QT1 EURO PLUG 2m (5A FUSE)

DRWG. No. CL1860

FORM: A4DRWGH